10 Maintenance

This chapter describes the maintenance of the module.

Introduction to Maintenance and Repair

The pump is designed for easy repair. The most frequent repairs such as piston seal replacement and purge valve frit exchange can be done from the front side without removing the pump from the system stack. These repairs are described in “Overview of Maintenance and Simple Repairs” on page 152 .

Warnings and Cautions

WARNING

Toxic, flammable and hazardous solvents, samples and reagents

The handling of solvents, samples and reagents can hold health and safety risks.

- ➔ When working with these substances observe appropriate safety procedures (for example by wearing goggles, safety gloves and protective clothing) as described in the material handling and safety data sheet supplied by the vendor, and follow good laboratory practice.
- ➔ The volume of substances should be reduced to the minimum required for the analysis.
- ➔ Do not operate the instrument in an explosive atmosphere.

WARNING

Electrical shock

Repair work at the module can lead to personal injuries, e.g. shock hazard, when the cover is opened.

- ➔ Do not remove the cover of the module.
- ➔ Only certified persons are authorized to carry out repairs inside the module.

WARNING

Personal injury or damage to the product

Agilent is not responsible for any damages caused, in whole or in part, by improper use of the products, unauthorized alterations, adjustments or modifications to the products, failure to comply with procedures in Agilent product user guides, or use of the products in violation of applicable laws, rules or regulations.

- ➔ Use your Agilent products only in the manner described in the Agilent product user guides.

CAUTION

Safety standards for external equipment

→ If you connect external equipment to the instrument, make sure that you only use accessory units tested and approved according to the safety standards appropriate for the type of external equipment.

CAUTION

Agilent 1260 Infinity pump heads have been discontinued for Agilent 1260 Infinity Binary Pumps

A number of 1260 Infinity Binary Pumps have been shipped with pump heads labeled as 1260 Infinity pump heads and passive inlet valves. While these parts are as good from a performance perspective, they are no longer used for 1260 Infinity Binary Pumps. Parts listed in this manual are not compatible to 1260 Infinity pump heads and may get damaged.

→ Please contact your Agilent service representative.

Cleaning the Module

To keep the module case clean, use a soft cloth slightly dampened with water, or a solution of water and mild detergent.

WARNING **Liquid dripping into the electronic compartment of your module can cause shock hazard and damage the module**

- Do not use an excessively damp cloth during cleaning.
- Drain all solvent lines before opening any connections in the flow path.

Overview of Maintenance and Simple Repairs

Figure 23 on page 152 shows the main user accessible assemblies of the binary pump. The pump heads and its parts require normal maintenance (for example, seal exchange) and can be accessed from the front (simple repairs). Replacement of valve cartridges or filters don't require to remove the pump from the system stack.

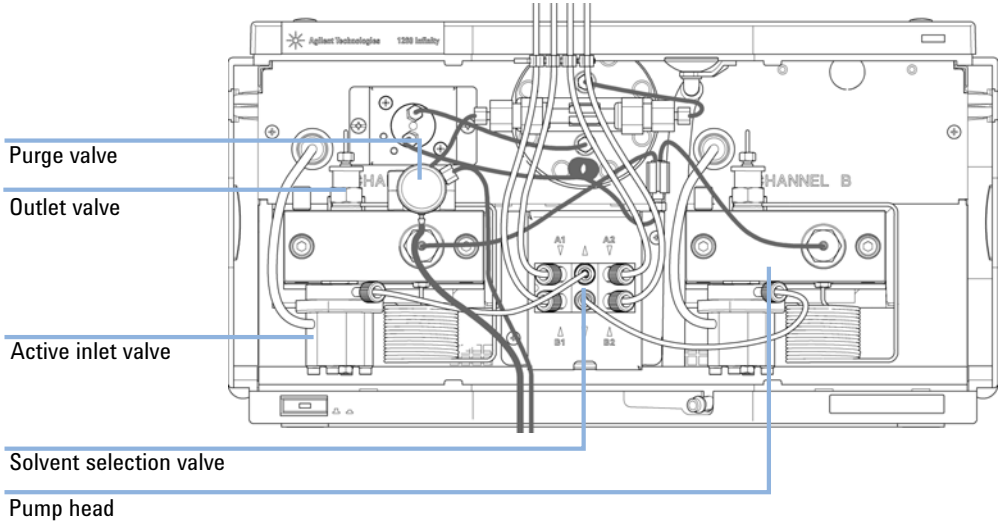

Figure 23 Overview of Maintenance and Simple Repairs

1	Purge valve, see "Exchanging the Purge Valve Frit or the Purge Valve" on page 154
2	Outlet valve, see "Exchanging the Outlet Valve" on page 173
3	Active inlet valve, see "Exchanging the Active Inlet Valve (AIV) or its Cartridge" on page 170
4	Pump head, see "Removing the Pump Head Assembly" on page 157
5	Solvent selection valve, see "Installation of the Solvent Selection Valve Upgrade Kit" on page 175

Maintenance Procedures

The procedures described in this section can be done with the binary pump in place in the system stack.

Table 12 Maintenance procedures

Procedure	Typical Frequency	Notes
"Exchanging the Purge Valve Frit or the Purge Valve" on page 154	Yearly, or if the frit shows indication of contamination or blockage If internally leaking	A pressure drop of > 10 bar in low delay volume configuration and > 20 bar in standard configuration across the frit (5 mL/min H_2O with purge valve open) indicates blockage Solvent dripping out of waste outlet when valve is closed
"Removing the Pump Head Assembly" on page 157	During yearly maintenance	Necessary to get access to pump seals and pistons
"Maintenance of a Pump Head without Seal Wash" on page 159	Yearly, or if pump performance indicates seal wear	Leaks at lower pump head side, unstable retention times, pressure ripple unstable — run **Valve Test** for verification Seal life time shorter than normally expected — check pistons while changing the seals
"Maintenance of a Pump Head with Seal Wash" on page 163	Yearly, or if pump performance indicates seal wear	Only necessary when Seal Wash Option is installed. Leaks at lower pump head side, loss of wash solvent
"Exchanging the Active Inlet Valve (AIV) or its Cartridge" on page 170	If leaking externally If solenoid is defective	Error messages "Inlet Valve Fuse" or "Inlet Valve Missing"
"Exchanging the Outlet Valve" on page 173	If internally leaking	Pressure ripple unstable, run **Valve Test** for verification
"Exchanging the Solvent Selection Valve" on page 177	If internally leaking If solenoid is defective	Cross port flow Error message "Valve Failed"

Exchanging the Purge Valve Frit or the Purge Valve

When

- Frit – when piston seals are exchanged or when contaminated or blocked (pressure drop of > 10 bar in low delay volume configuration and > 20 bar in standard configuration across the frit at a flow rate of 5 mL/min of water with purge valve opened)
- Purge valve – if internally leaking

Tools required

p/n	Description
8710-0510	Wrench open 1/4 — 5/16 inch
8710-1924	Wrench open 14 mm
	Pair of tweezers
OR	Toothpick

Parts required

#	p/n	Description
1	01018-22707	PTFE frits (pack of 5)
1	G1312-60061	Purge valve 1260
1	5067-4728	Seal cap (OPTIONAL)

Preparations

- Switch off pump at the main power switch
- Remove the front cover
- Use an optional solvent shutoff valve or lift up solvent filters in solvent reservoirs for avoiding leakages.

1 Using a 1/4 inch wrench disconnect the pump outlet capillary from the purge valve. Disconnect the waste tube. Beware of leaking solvents due to hydrostatic pressure.

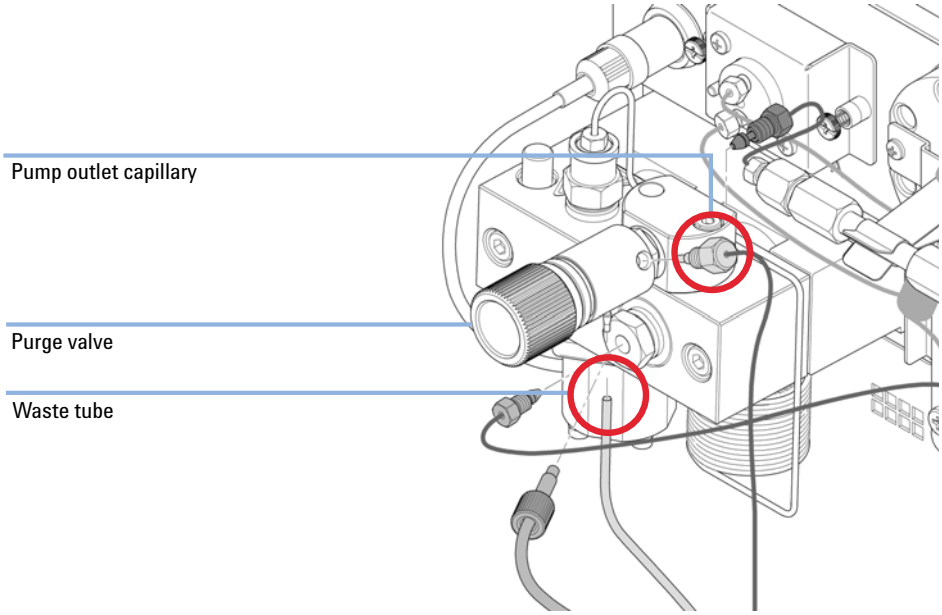

2 Using the 14 mm wrench, unscrew the purge valve and remove it from the purge valve holder.

3 Remove the seal cap from the purge valve.

4 Using a pair of tweezers or a toothpick remove the frit.

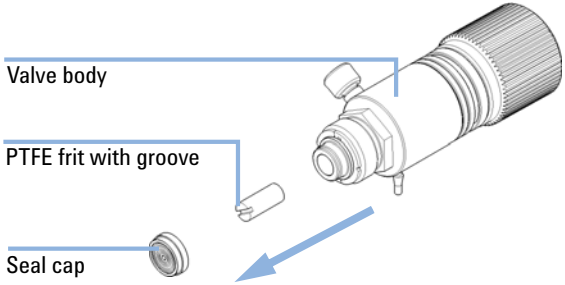

5 Place a new frit into the purge valve with the orientation of the frit as shown below (slit in frit points to the front). Reinstall the seal cap including the gold seal.

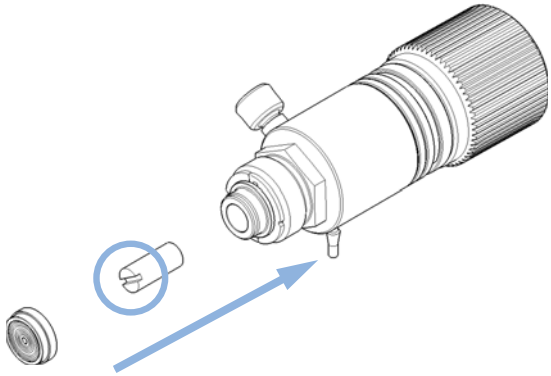

NOTE Before reinstallation always check the gold seal in the seal cap. A deformed seal cap should be exchanged.

6 Insert the purge valve into the purge valve holder and orient the waste outlet nozzle downward.

7 Tighten the purge valve and reconnect outlet capillary and waste tubing.

Removing the Pump Head Assembly

When

- Exchanging pump seals
- Exchanging pistons
- Exchanging seals of the seal wash option

Tools required

p/n	Description
8710-0510	Wrench open 1/4 — 5/16 inch
8710-2411	Hex key 3 mm12 cm long
8710-2392	Hex key 4 mm15 cm long T-handle
5023-0240	Hex driver, ¼", slitted

Preparations

Switch off the pump at the main power switch

CAUTION

Damage of the pump drive

Starting the pump when the pump head is removed may damage the pump drive.

➔ Never start the pump when the pump head is removed.

NOTE

Both pump head assemblies use the same internal components. In addition, pump head A is fitted with the purge valve. The following procedure describes the removal and disassembly of pump head A (left). For pump head B (right) proceed in the same way and skip steps that deal with the purge valve.

1 Remove the front cover.

2 Disconnect the capillaries at the back of the purge valve holder, the pump head adapter and the tube at the active inlet valve. Beware of leaking solvents.

3 Using a 4-mm hexagonal key stepwise loosen and remove the two pump head screws.

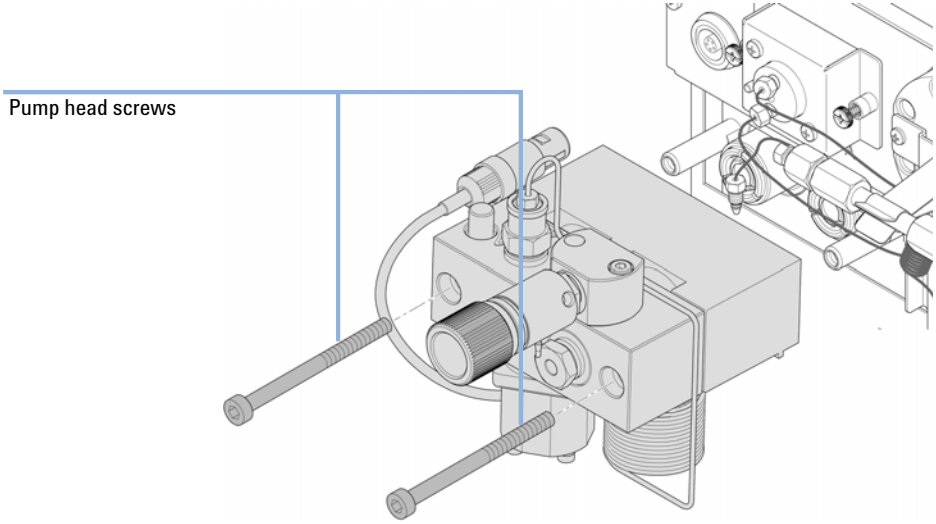

Maintenance of a Pump Head without Seal Wash

When

In case of maintenance or pump head internal leaks

Tools required

p/n	Description
8710-0510	Wrench open 1/4 — 5/16 inch
8710-2411	Hex key 3 mm12 cm long
8710-2392	Hex key 4 mm15 cm long T-handle
01018-23702	Insert tool

Parts required

	#	p/n	Description
	1	5063-6589	Piston seal PTFE, carbon filled, black (pack of 2), default
OR	1	0905-1420	PE seals (pack of 2)
	1	5063-6586	Sapphire piston

Preparations

- Switch off the pump at the main power switch
- Remove the front cover to have access to the pump heads
- "Removing the Pump Head Assembly" on page 157

NOTE

Both pump head assemblies use the same internal components. In addition, pump head A is fitted with the purge valve. The following procedure describes the removal and disassembly of pump head A (left). For pump head B (right) proceed in the same way and skip steps that deal with the purge valve.

1 Place the pump head on a flat surface. Loosen the lock screw (two turns) and while holding the lower half of the assembly (piston housing) carefully lift up the pump housing and remove it from the piston housing.

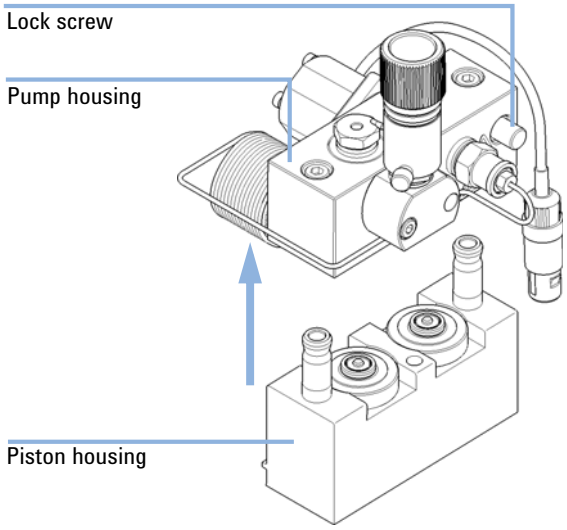

2 Remove the support rings from the piston housing and lift the housing away from the pistons.

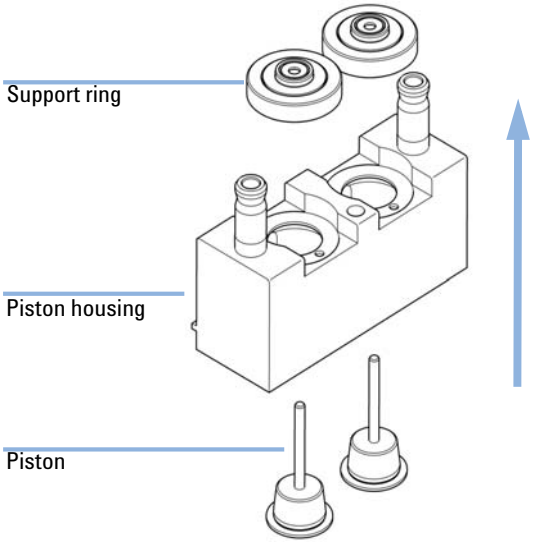

3 Check the piston surface and remove any deposits or layers. Most suitable is polishing of the piston rod with toothpaste. Replace the piston if scratched or if dents are visible.

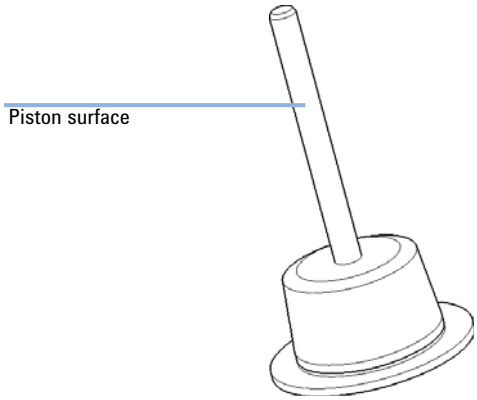

NOTE

The best way to inspect a piston is to hold it up and watch e.g. a light bulb through the piston rod. The transparent sapphire acts as a very strong magnifier and even smallest surface abnormalities become visible.

4 Using the steel side of the insert tool carefully remove the seal from the pump housing. Remove wear retainers, if still present.

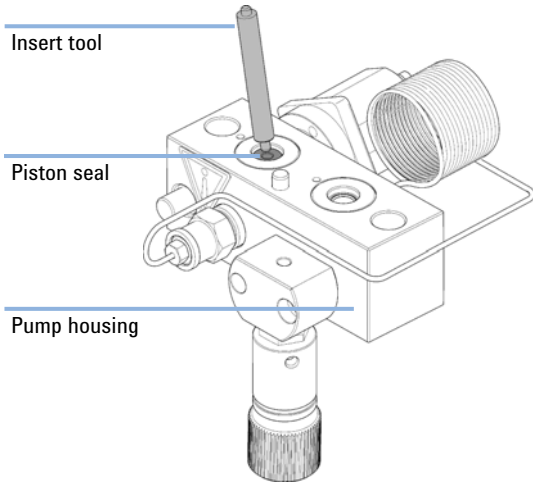

5 Using the plastic side of the insert tool insert the new seals into the pump head and press them firmly in position.

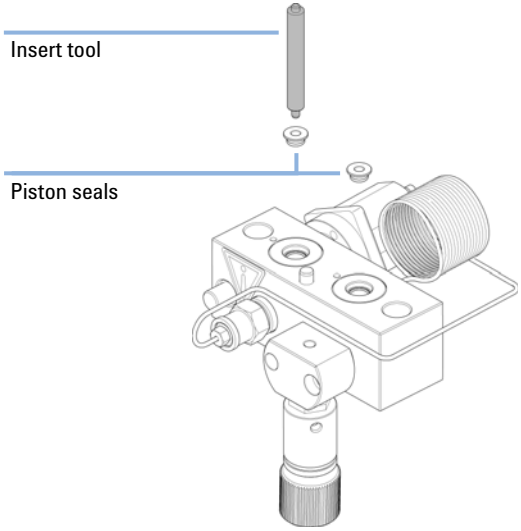

6 Place a seal wash gasket in the recess of the support ring. Put the seal holder on top of the gasket.

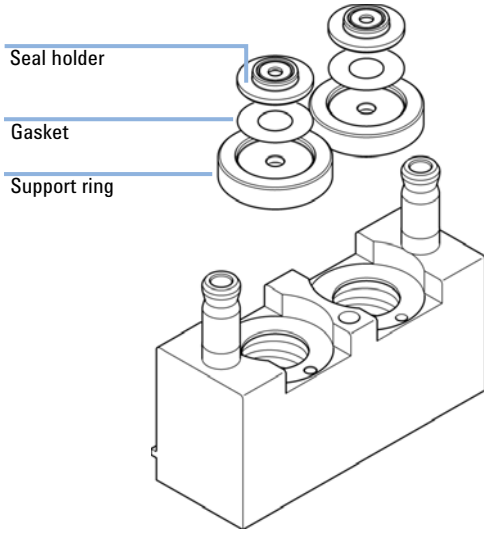

7 Reassemble the pump head assembly. Note the correct position of the pin on the support ring.

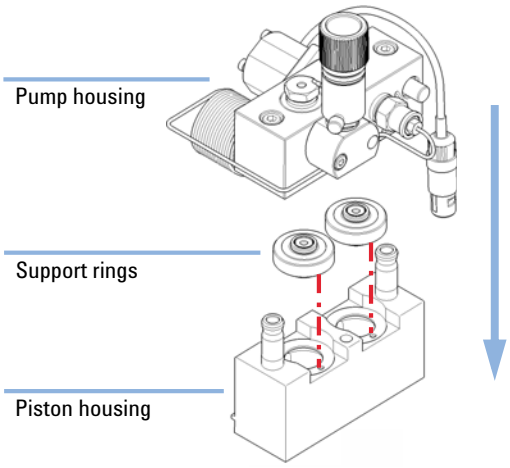

NOTE

Reset the seal wear counter and liquimeter in the Agilent Lab Advisor.

8 Insert the pistons and carefully press them into the seals.

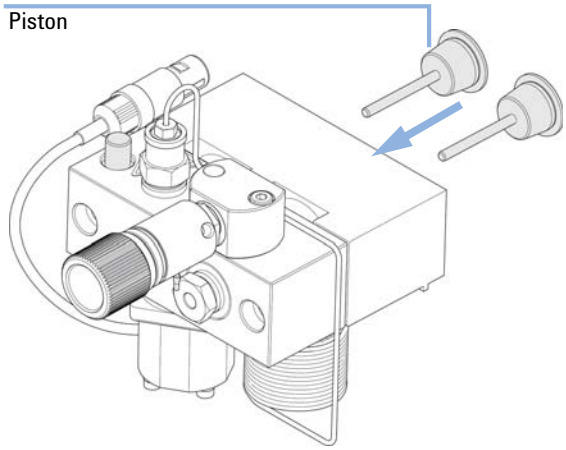

9 Tighten the lock screw.

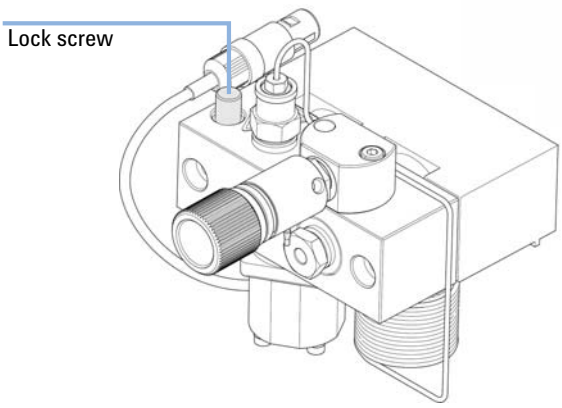

Next Steps:

10 Reinstall the pump head assembly, see "Reinstalling the Pump Head Assembly" on page 167.

11 If a standard seal has been installed, run the seal wear-in procedure, see "Seal Wear-in Procedure" on page 169.

12 For the normal phase seal, the purge valve frit should be replaced, see "Exchanging the Purge Valve Frit or the Purge Valve" on page 154.

Maintenance of a Pump Head with Seal Wash

When

In case of maintenance or pump head internal leaks

Tools required

p/n	Description
8710-2411	Hex key 3 mm12 cm long
8710-2392	Hex key 4 mm15 cm long T-handle
01018-23702	Insert tool
	Screwdriver, small flat head

Parts required

p/n	Description
0905-1175	Wash seal (PTFE)
5062-2484	Gasket, seal wash (pack of 6)
5063-6586	Sapphire piston

Preparations

- Switch off the pump at the main power switch
- Remove the front cover to have access to the pump heads
- "Removing the Pump Head Assembly" on page 157

NOTE

Both pump head assemblies use the same internal components. In addition, pump head A is fitted with the purge valve. The following procedure describes the removal and disassembly of pump head A (left). For pump head B (right) proceed in the same way and skip steps that deal with the purge valve.

1 Place the pump head on a flat surface. Loosen the lock screw (two turns) and while holding the lower half of the assembly (piston housing) carefully lift up the pump housing and remove it from the piston housing.

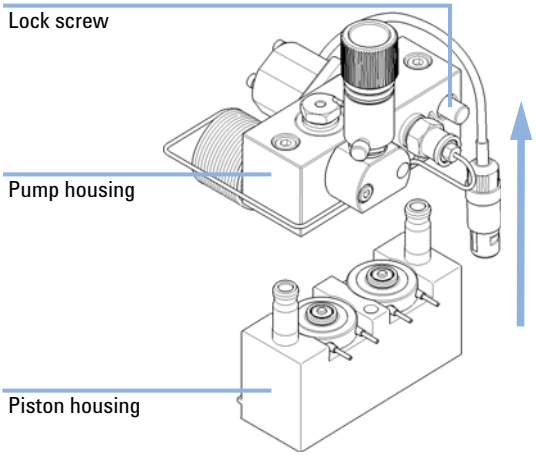

2 Remove the seal holder and the seal wash support rings from the piston housing. Remove the seal holder from the support ring assembly.

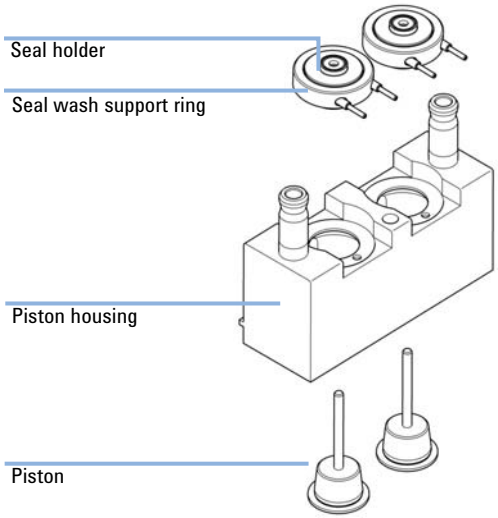

3 Check the piston surface and remove any deposits or layers. Most suitable is polishing of the piston rod with toothpaste. Replace the piston if scratched or if dents are visible.

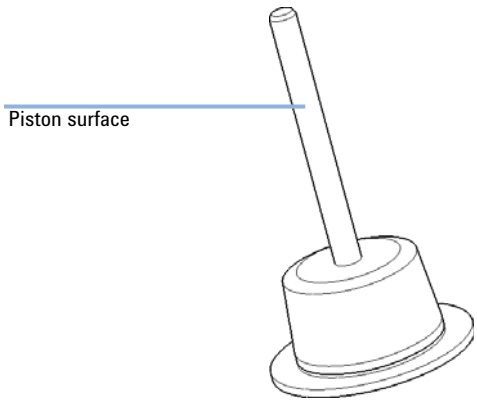

NOTE

The best way to inspect a piston is to hold it up and watch e.g. a light bulb through the piston rod. The transparent sapphire acts as a very strong magnifier and even smallest surface abnormalities become visible.

4 Using the steel side of the insert tool carefully remove the seal from the pump housing. Remove wear retainers, if still present.

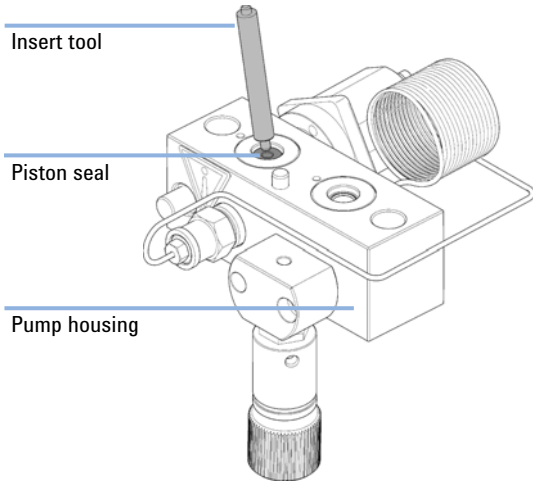

5 Using the plastic side of the insert tool insert the new seals into the pump head and press them firmly in position.

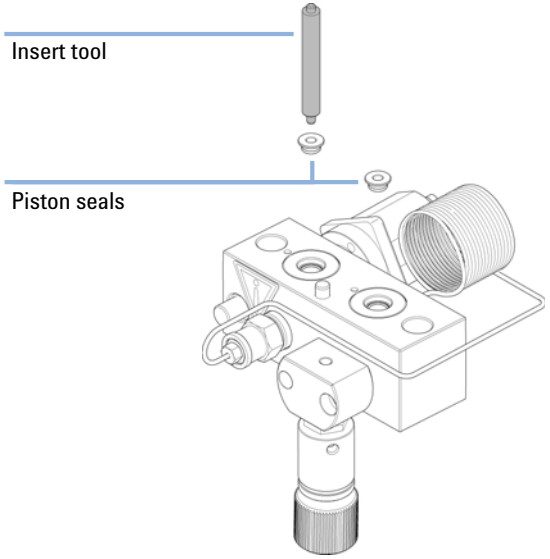

6 Using the steel side of the insert tool remove the seal wash gasket and the wash seal from the support ring. The removed seal will be damaged and cannot be re-used!

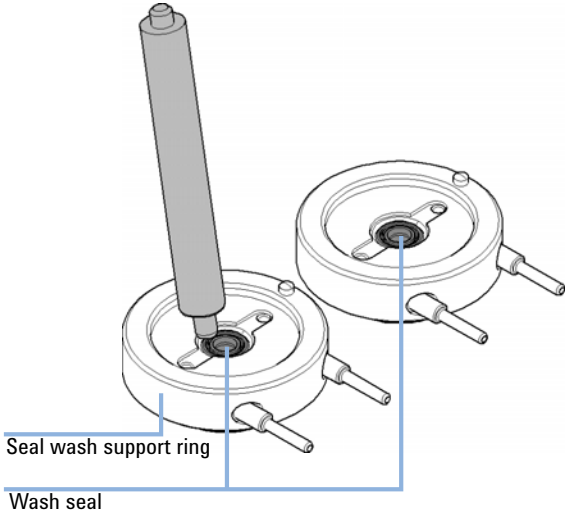

7 Using the plastic side of the insert tool press the new wash seal (spring pointing upwards) into the recess of the support ring.

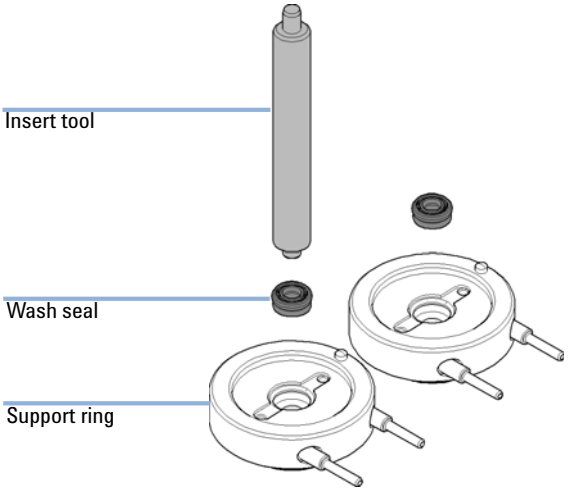

8 Place a seal wash gasket in the recess of the support ring. Put the seal holder on top of the gasket.

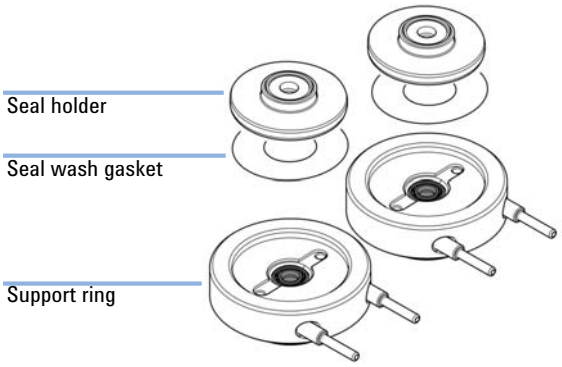

9 Place the support rings on the piston housing (pistons not installed) and snap the pump housing and piston housing together. Note the correct position of the pin on the support ring.

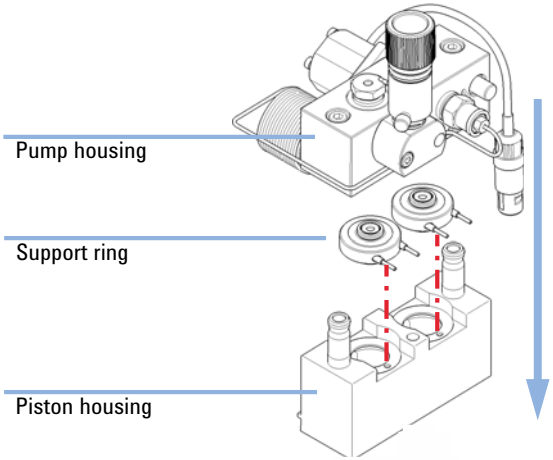

10 Insert the pistons and carefully press them into the seals.

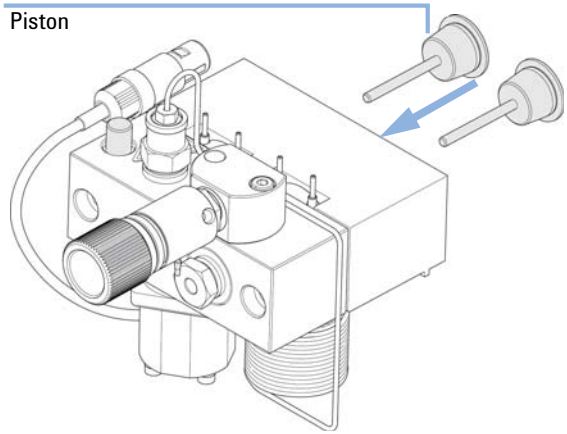

11 Tighten the lock screw.

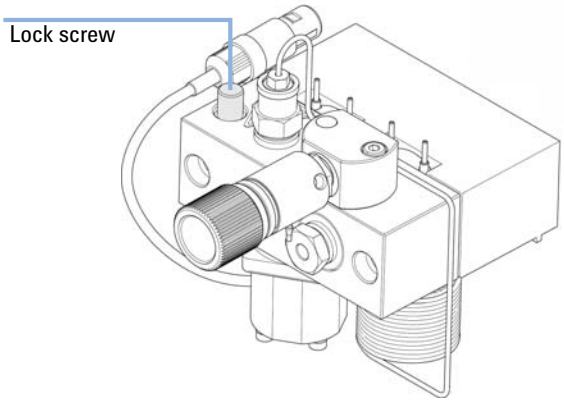

12 Reinstall the pump head assembly, see "Reinstalling the Pump Head Assembly" on page 167.

Reinstalling the Pump Head Assembly

When When reassembling the pump

Tools required

p/n	Description
8710-2411	Hexagonal key, 3 mm
	Hexagonal key, 4 mm

Parts required

#	p/n	Description
1	79846-65501	Pump head grease

1 Slide the pump head assembly onto the pump drive.

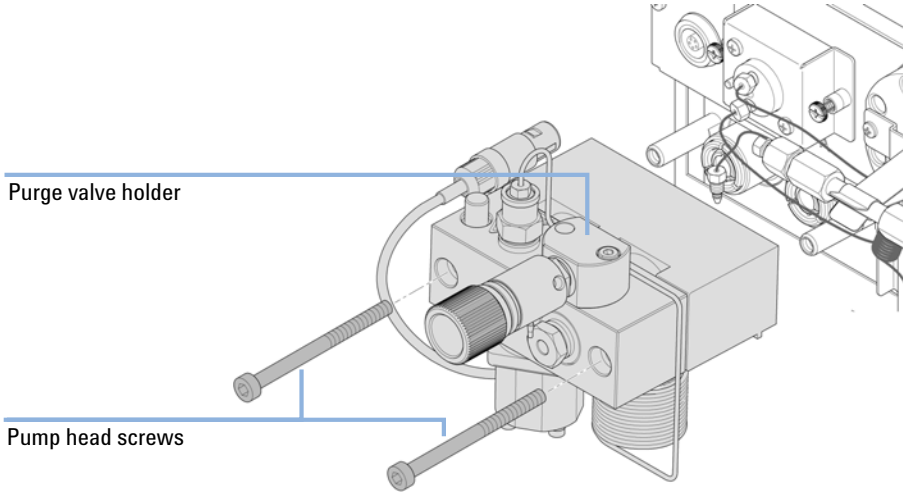

2 Using a 4 mm hexagonal key tighten the pump head screws stepwise with increasing torque.

3 Reconnect the tubing and capillaries to the connector.

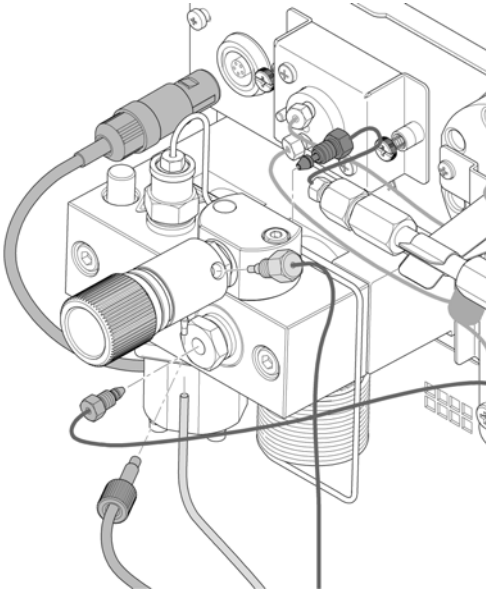

Seal Wear-in Procedure

CAUTION

Seal damage

This procedure is required for black PTFE seals (standard applications, p/n 5063-6589), but it will damage the yellow PE seals (normal phase applications, p/n 0905-1420).

→ Do not run the seal wear-in procedure if PE seals are installed in the pumphead.

1. Put a bottle with 100 ml of isopropanol in the solvent cabinet and place the solvent intake filter of the pump head you want to wear in into this bottle.
2. Screw the PEEK adapter 1/4-28 to 10-32 (0100-1847) onto the active inlet valve and connect the inlet tube from the bottle head directly to it.
3. Connect the Restriction capillary (5022-2159) to the purge valve. Connect its other end to a waste container.
4. Open the purge valve and purge the system for 5 min with isopropanol at a flow rate of 2 mL/min.
5. Close the purge valve, set the flow to a value that gives a pressure of 350 bar. Pump 15 min at this pressure to wear the seals in. The pressure can be monitored on the analog output connector of the pump, with the Instant Pilot, chromatographic data system or any other controlling device connected to your pump.
6. Turn OFF the pump, slowly open the purge valve to release the pressure from the system, disconnect the restriction capillary and reconnect the outlet capillary to the purge valve. Reconnect the intake tubing to the solvent selection valve and the connecting tube from the solvent selection valve (if installed) to the AIV.
7. Purge your system with the solvent used for your next application.

Exchanging the Active Inlet Valve (AIV) or its Cartridge

When

If internally leaking (backflow)

Tools required

Description
Wrench, 14 mm

Parts required

p/n	Description
G1312-60025	Active inlet valve body, without cartridge
G1312-60020	Cartridge for active inlet valve 600 bar

Preparations

Switch off the pump at the main power switch

CAUTION

Ensure correct fit of the active inlet valve

Overtightening will destroy the active inlet valve cartridge.

➔ Tighten the active inlet valve properly.

1 Remove the front cover.
2 Unplug the active inlet valve cable from the connector.
3 Disconnect the solvent inlet tube at the inlet valve (beware of leaking solvents).

NOTE

Binary pumps without solvent selection valve (SSV) have an adapter installed between the solvent line and the active inlet valve (AIV). Disconnect the solvent tubes at the adapter and remove the adapter from the AIV.

4 Using a 14 mm wrench, loosen the active inlet valve and remove the valve from the pump head.

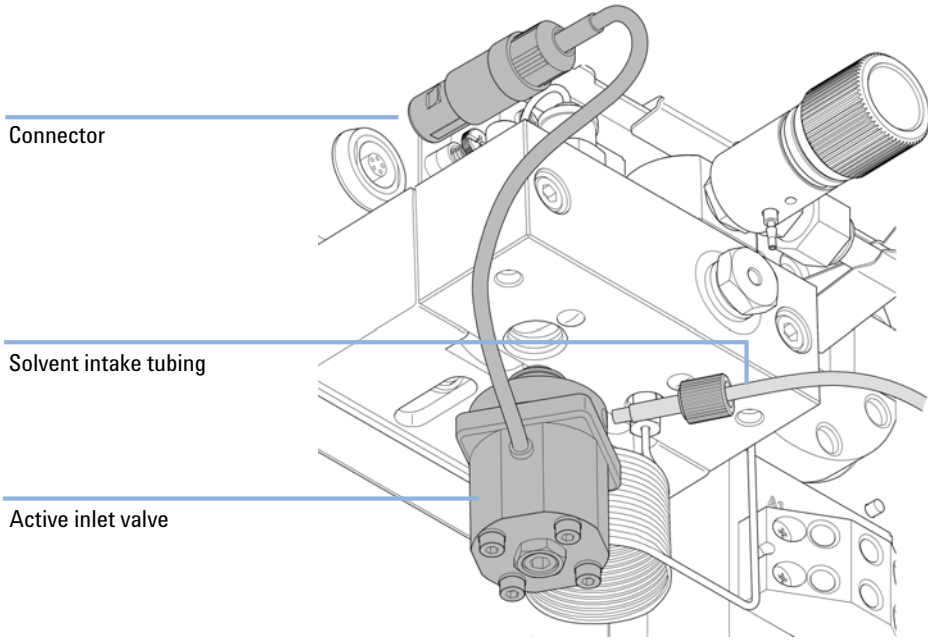

5 Using a pair of tweezers, remove the valve cartridge from the defective active inlet valve.

6 Push the cartridge into the new active inlet valve.

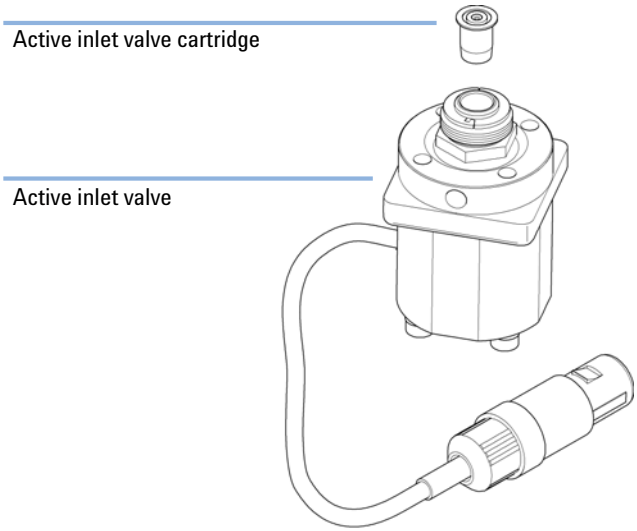

7 Screw the new valve into the pump head. With the 14 mm wrench turn the nut until it is hand tight.

8 Position the valve so that the solvent inlet tube connection points towards the front.

9 Using the 14 mm wrench tighten the nut by turning the valve in its final position (not more than a quarter turn). Do not overtighten the valve.

10 Reconnect the Active Inlet Valve cable to the connector in the Z-panel and the inlet tube to the valve.

11 Reinstall the front cover.

NOTE After an exchange of the valve it may be required to pump several mL of the solvent used in the current application before the flow stabilizes at a pressure ripple as low as it used to be when the system was still working properly.

Exchanging the Outlet Valve

When if leaking internally

Tools required

Description
Wrench, 1/4 - 1/5 inch
Wrench 1/4 inch
Wrench, 14 mm

Parts required

p/n	Description
G1312-60067	Outlet valve 1220/1260

Preparations Switch off the pump at the main power switch

1. Using a ¼ inch wrench disconnect the absorber capillary from the outlet valve.
2. Unscrew the valve with the 14 mm wrench and remove it from the pump body.
3. Do not disassemble the outlet valve, as this can damage the valve.

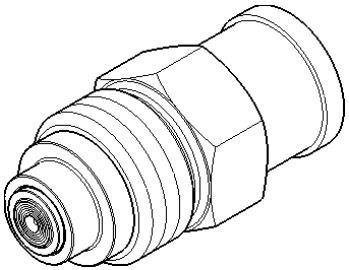

4. Reinstall the outlet valve and tighten it using a torque wrench (12 Nm).

5 Reconnect the capillary.

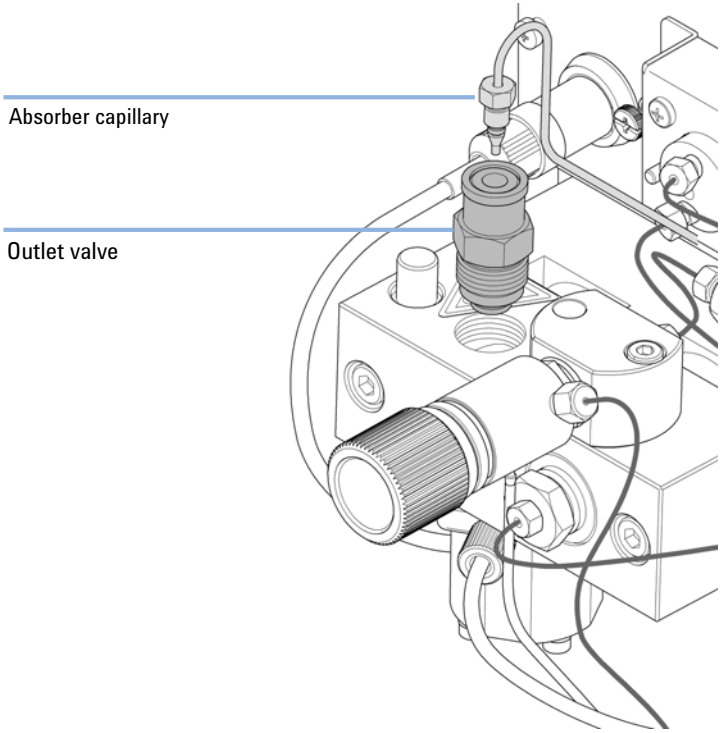

Installation of the Solvent Selection Valve Upgrade Kit

A solvent selection valve allows you to choose between four different solvents that can be used with a binary pump. The valve switches between two solvents A1 and A2 for channel A of the left pump head and two solvents B1 and B2 for channel B of the right pump head.

When

Applicable modules: This kit is compatible to the 1260 Infinity Binary Pumps G1312B and G1312C and to the 1260 Infinity Binary Pump Clinical ed. K1312B.

Tools required

Description
Screwdriver Pozidriv #1

Parts required

p/n	Description
G1381-60000	Solvent Selection Valve Upgrade Kit

Preparations

If required, remove solvent tubes from the inlet valves.

NOTE The figures below show a Binary Pump G1312B. The kit can be used similarly for the Binary Pump G1312C and for the Binary Pump Clinical ed. K1312B.

1 Remove the front cover sheet by removing both screws.

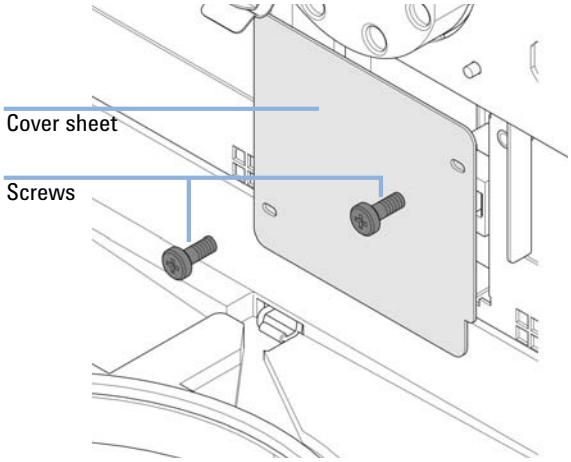

2 Plug in the connector of the solvent selection valve

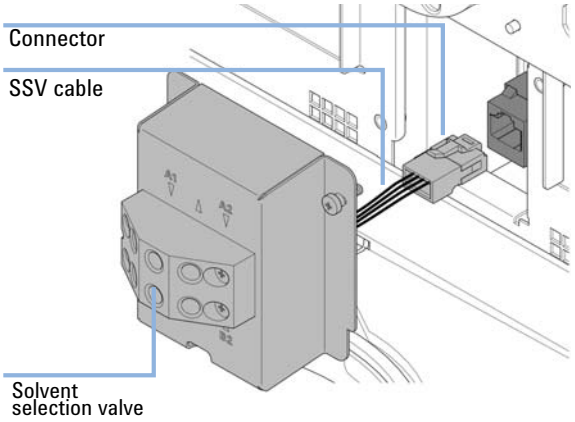

3 Install the solvent selection assembly by fixing both indicated screws.

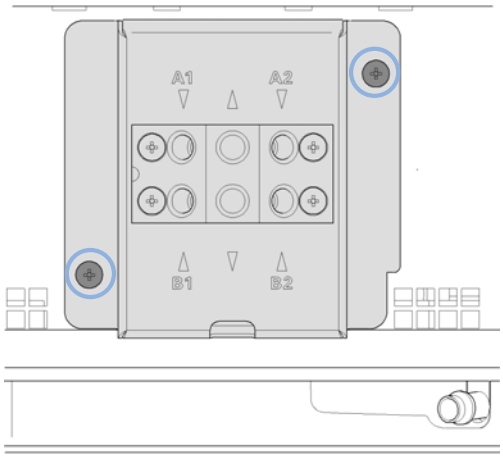

4 Connect the outlet for solvent A (upper row) to the inlet valve of the left pump head. Connect the outlet for solvent B (lower row) to the inlet valve of the right pump head. Put the solvent bottles into the solvent cabinet. Connect the bottle heads of solvents A1 and A2 to the inlets in the upper row, see labels on valve assembly. Connect the bottle heads of solvents B1 and B2 to the inlets in the lower row, see labels on valve assembly.

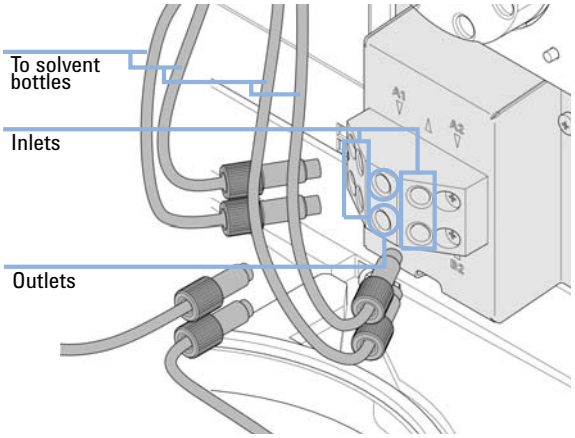

For controlling the solvent selection valve, please refer to the online help or user manual of your control software.

Exchanging the Solvent Selection Valve

When	If leaking internally (crossflow between the ports), or if one of the channels is blocked	
Tools required	**p/n**	**Description**
	8710-0899	Screwdriver, Pozidriv #1
Parts required	**p/n**	**Description**
	G1381-60000	Solvent Selection Valve Upgrade Kit
Preparations	Switch off the pump at the main power switch	

1 Lift solvent bottles out of the solvent cabinet and place them on the table. Disconnect the solvent tubes from the solvent selection valve and empty the tubes into the bottles. Place the bottles back into the solvent cabinet.	**2** Disconnect all tubings from the solvent selection valve. 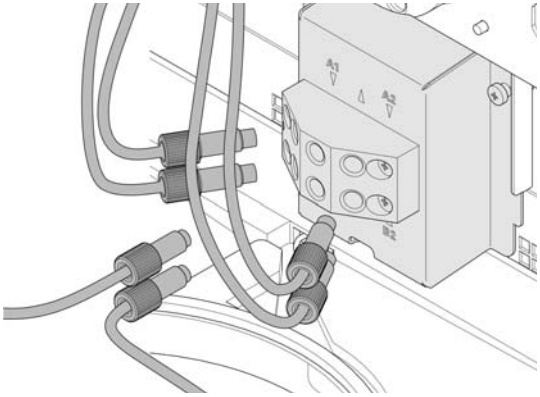

3 Using a Pozidriv screwdriver #1 loosen the holding screws of the valve holder. 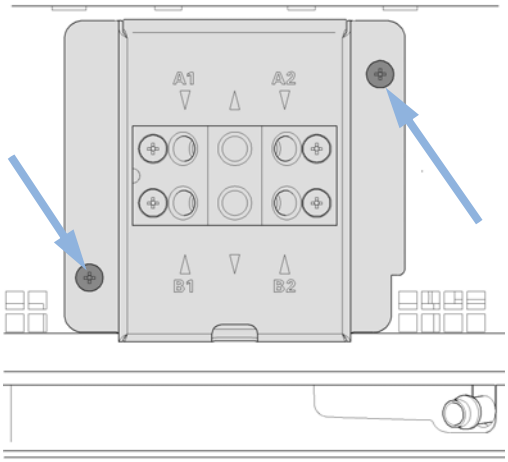	**4** Carefully pull the valve holder out and disconnect the valve cable at the connector. 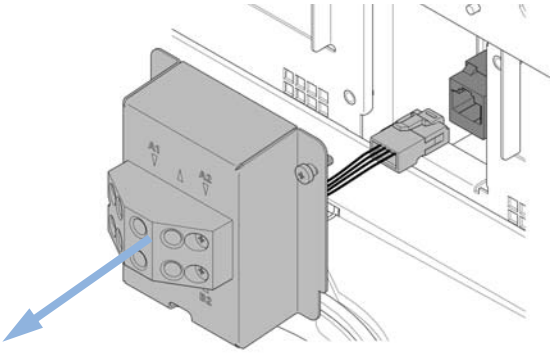
5 Exchange the defective solvent selection valve. 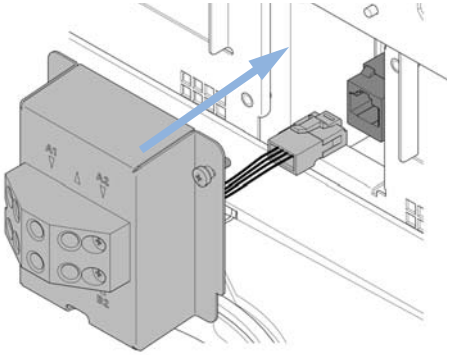	**6** Tighten the screws of the valve holder. 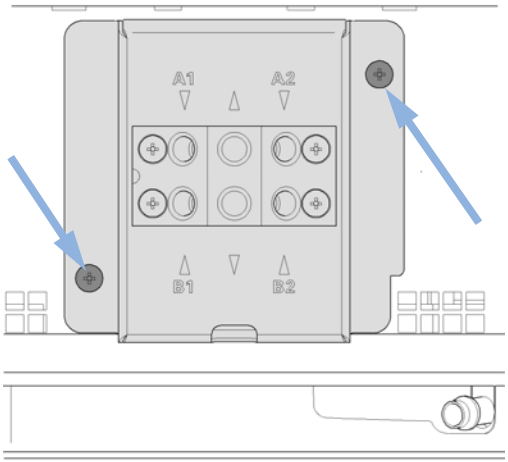

7 Reconnect all tubings to the solvent selection valve. 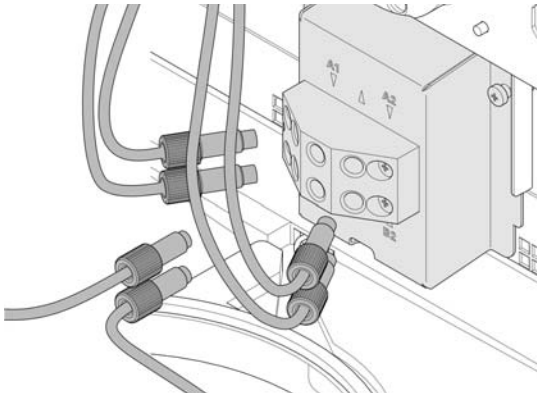	

NOTE After an exchange of the valve it may be required to pump several mL of solvent before the flow stabilizes at a pressure ripple as low as it used to be when the system was still working properly.

Exchanging the Optional Interface Board

When Board defective

Parts required

#	Description
1	BCD (Interface) board

Preparations

- Switch OFF the module at the main power switch.
- Unplug the module from main power.

CAUTION

Electronic boards and components are sensitive to electrostatic discharge (ESD).

ESD can damage electronic boards and components.

→ In order to prevent damage always use an ESD protection when handling electronic boards and components.

1 Disconnect cables from the interface board connectors.
2 Loosen the screws. Slide out the interface board from the module.

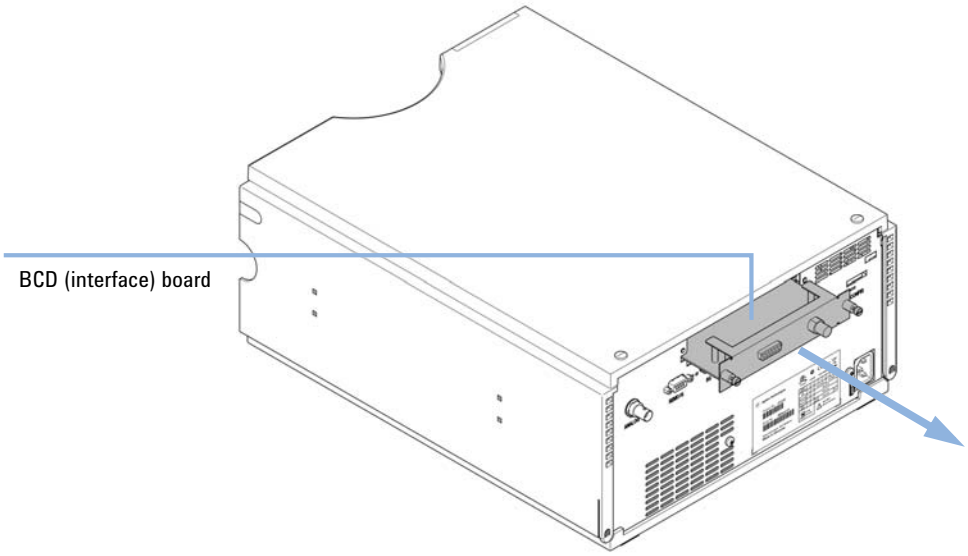

Figure 24 Exchanging the Interface Board

3 Install the new interface board. Secure the screws.
4 Reconnect the cables to the board connector

Replacing Module Firmware

When

The installation of newer firmware might be necessary
- if a newer version solves problems of older versions or
- to keep all systems on the same (validated) revision.

The installation of older firmware might be necessary
- to keep all systems on the same (validated) revision or
- if a new module with newer firmware is added to a system or
- if third party control software requires a special version.

Tools required

	Description
	LAN/RS-232 Firmware Update Tool
OR	Agilent Lab Advisor software
OR	Instant Pilot G4208A (only if supported by module)

Parts required

#	Description
1	Firmware, tools and documentation from Agilent web site

Preparations

Read update documentation provided with the Firmware Update Tool.

To upgrade/downgrade the module's firmware carry out the following steps:

1 Download the required module firmware, the latest LAN/RS-232 FW Update Tool and the documentation from the Agilent web.
- http://www.chem.agilent.com/_layouts/agilent/downloadFirmware.aspx?whid=69761

2 For loading the firmware into the module follow the instructions in the documentation.

Module Specific Information

Table 13 Module Specific Information (G1312B)

G1312B Binary pump	
NOTE The module G1312B exists both as part of the 1200 Series and 1260 Infinity product lines. These modules use different solvent selection valves and main boards. Latest firmware revisions in each set automatically recognize the main board type and can be used without special handling.	
• A.06.06 [020] • A.06.10 [020] • A.06.34 [001] • A.06.53 [002]	These revisions recognize the board type and shall be used. A.06.06 is the minimum version, which is compatible to 1260 Infinity Binary Pumps G1312B. Older G1312B firmware is only compatible to 1200 Series Binary Pumps SL G1312B. All listed firmware revisions allow emulation of G1312A pumps. Please consult the Firmware Update Guide for 1200 Infinity Systems for details.

11
Parts and Materials for Maintenance

This chapter lists all parts and tools that are required for maintenance.

Hydraulic Path with Solvent Selection Valve

Item	p/n	Description
1	G1322-67300	Kit of 4 solvent tubes including labels for connection degasser to SSV
2	G1312-60068	1260 Infinity Solvent selection valve (includes holder)
	5041-8365	Blank plug for unused SSV channels
3	G1312-60003	Connecting tube 1260 Infinity Solvent selection valve to active inlet valve
4	G1312-60025	Active inlet valve body, without cartridge
5	G1312-60045	Pump head assembly with seal wash
6	G1312-60067	Outlet valve 1220/1260
7	G1312-87300	Absorber capillary
8	G1312-67302	Capillary, channel A and B pump head outlet to mixing chamber (included)
9	G1312-87301	Restriction capillary (mixing capillary to pressure sensor)
11	G1312-87305	Capillary SSL, 0.17 x 150 mm (pressure sensor to damper)
13	G1312-87330	Mixer
14	G1312-87306	Capillary SSL, 0.17 x 105 mm (connections to solvent mixer)
	G1312-04100	Bracket for solvent mixer
15	G1312-60061	Purge valve 1260
	5042-8507	Peristaltic pump cartridge, silicone tubing
	5065-9978	Tubing, 1 mm i.d., 3 mm o.d., silicone, 5 m, for seal wash option
16	G1312-87303	Capillary ST 0.17 mm x 400 mm S/S
	G1312-87304	Capillary ST 0.17 mm x 700 mm S/S
17	5062-2461	Waste tube, 5 m (reorder pack)

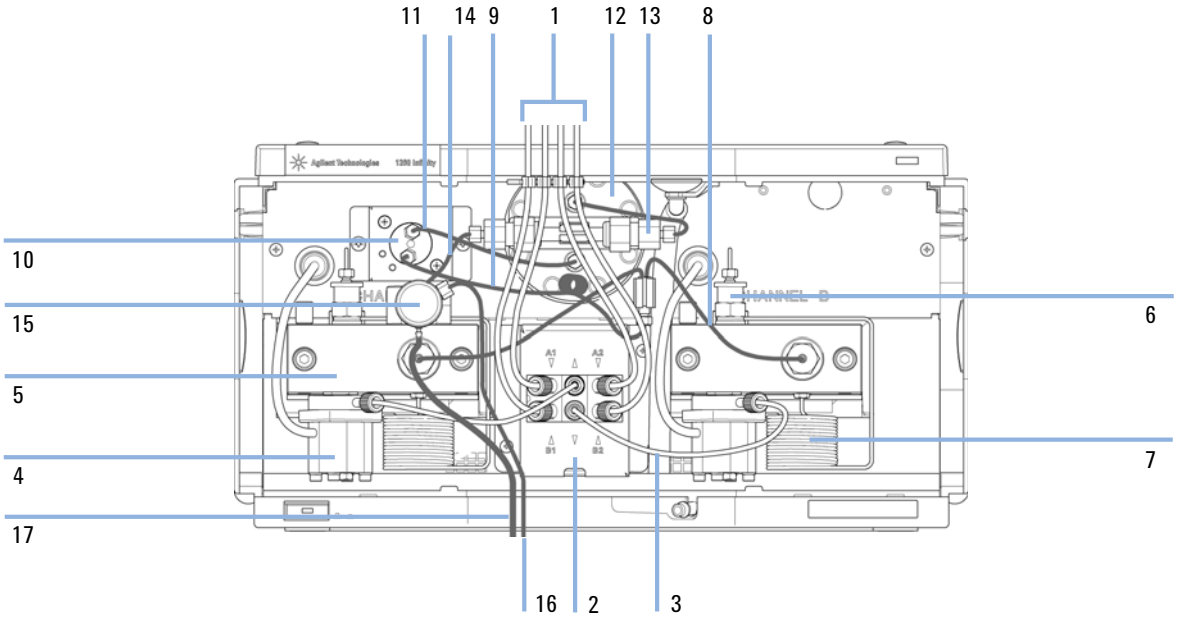

Figure 25 Hydraulic Path with Solvent Selection Valve

Hydraulic Path without Solvent Selection Valve

Item	p/n	Description
1	G1322-67300	Kit of 4 solvent tubes including labels for connection degasser to SSV
2	0100-1847	PEEK adapter 1/4-28 to 10-32 (Adapter AIV to solvent inlet tubes)
3	G1312-60025	Active inlet valve body, without cartridge
4	G1312-60056	Pump Head 1200 SL without Seal Wash
5	G1312-60067	Outlet valve 1220/1260
6	G1312-87300	Absorber capillary
7	G1312-67302	Capillary, channel A and B pump head outlet to mixing chamber (included)
8	G1312-87301	Restriction capillary (mixing capillary to pressure sensor)
10	G1312-87305	Capillary SSL, 0.17 x 150 mm (pressure sensor to damper)
12	G1312-87330	Mixer
13	G1312-87306	Capillary SSL, 0.17 x 105 mm (connections to solvent mixer)
	G1312-04100	Bracket for solvent mixer
14	G1312-60061	Purge valve 1260
15	G1312-87303	Capillary ST 0.17 mm x 400 mm S/S
	G1312-87304	Capillary ST 0.17 mm x 700 mm S/S
16	5062-2461	Waste tube, 5 m (reorder pack)
17	5042-8507	Peristaltic pump cartridge, silicone tubing
18	5065-9978	Tubing, 1 mm i.d., 3 mm o.d., silicone, 5 m, for seal wash option

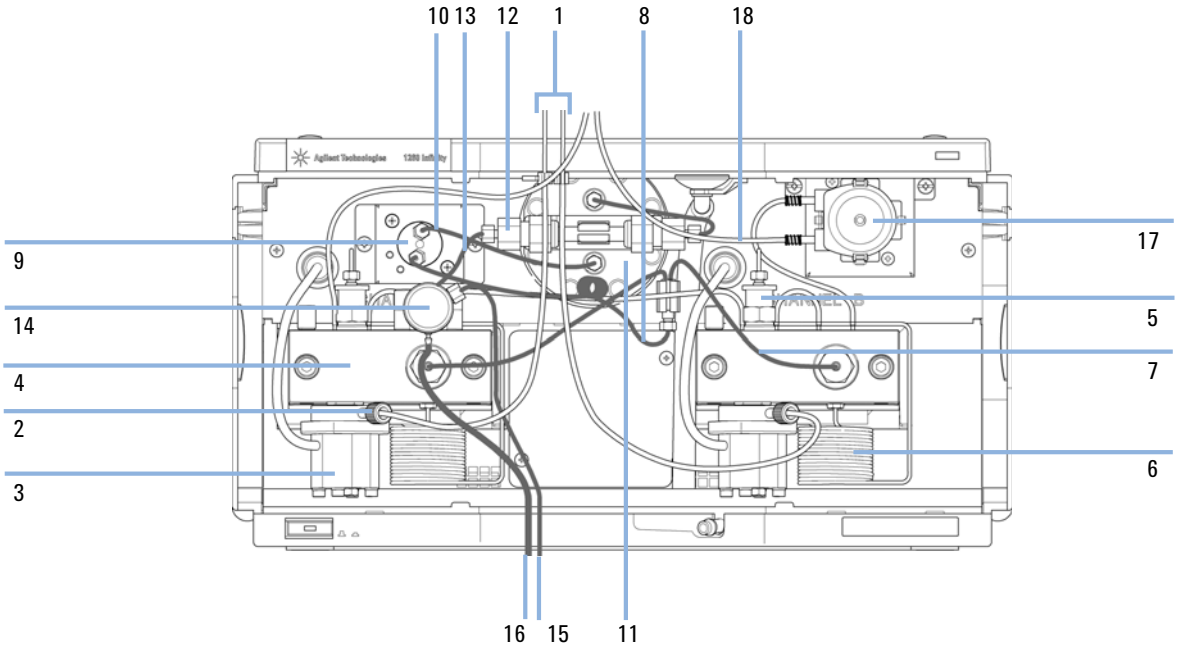

Figure 26 Hydraulic Path without Solvent Selection Valve, with Active Seal Wash

Pump Head Assembly Without Seal Wash

Item	p/n	Description
	G1312-60056	Pump Head 1200 SL without Seal Wash
1	5063-6586	Sapphire piston
2	G1311-60002	Piston housing
3	5067-1560	Support Ring SL, no seal wash
4	5062-2484	Gasket, seal wash (pack of 6)
5	5042-8952	Seal holder
6	G1312-87300	Absorber capillary
7	5063-6589	Piston seal PTFE, carbon filled, black (pack of 2), default
8	G1311-25200	Pump chamber housing
9	0515-0175	Mounting screw for manual purge valve holder, M4, 20 mm long
10	G1312-23200	Holder for manual purge valve
11	G1312-60061	Purge valve 1260
12	G1312-60067	Outlet valve 1220/1260
13	5042-1303	Lock screw
14a	G1312-60025	Active inlet valve body, without cartridge
14b	G1312-60020	Cartridge for active inlet valve 600 bar
15	G1312-23201	Adapter
16	0515-2118	Pump head screw (M5, 60 mm)

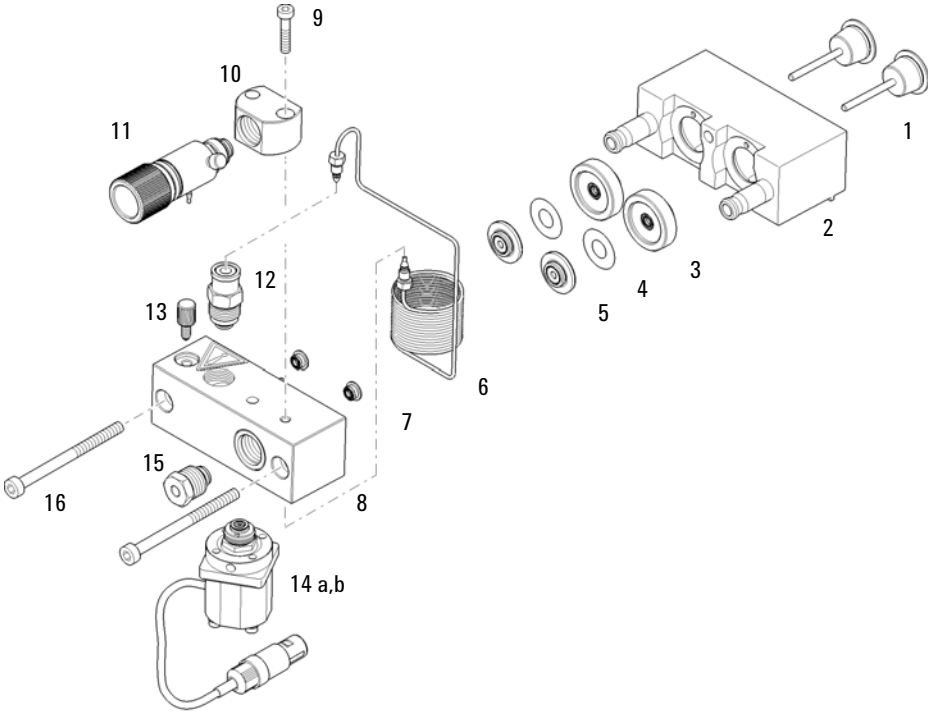

Figure 27 Pump Head Assembly Without Seal Wash

Pump Head Assembly with Seal Wash Option

Item	p/n	Description
	G1312-60045	Pump head assembly with seal wash
1	5042-8507	Peristaltic pump cartridge, silicone tubing
	5065-9978	Tubing, 1 mm i.d., 3 mm o.d., silicone, 5 m, for seal wash option
2	5063-6586	Sapphire piston
3	G1311-60002	Piston housing
4	01018-60027	Support ring seal wash
5	0905-1175	Wash seal (PTFE)
6	5062-2484	Gasket, seal wash (pack of 6)
7	5042-8952	Seal holder
8	G1312-87300	Absorber capillary
9	5063-6589	Piston seal PTFE, carbon filled, black (pack of 2), default
10	0515-0175	Mounting screw for manual purge valve holder, M4, 20 mm long
11	G1312-23200	Holder for manual purge valve
12	G1312-60061	Purge valve 1260
13	G1312-60067	Outlet valve 1220/1260
14	5042-1303	Lock screw
15	G1311-25200	Pump chamber housing
16a	G1312-60025	Active inlet valve body, without cartridge
16b	G1312-60020	Cartridge for active inlet valve 600 bar
17	G1312-23201	Adapter
18	0515-2118	Pump head screw (M5, 60 mm)

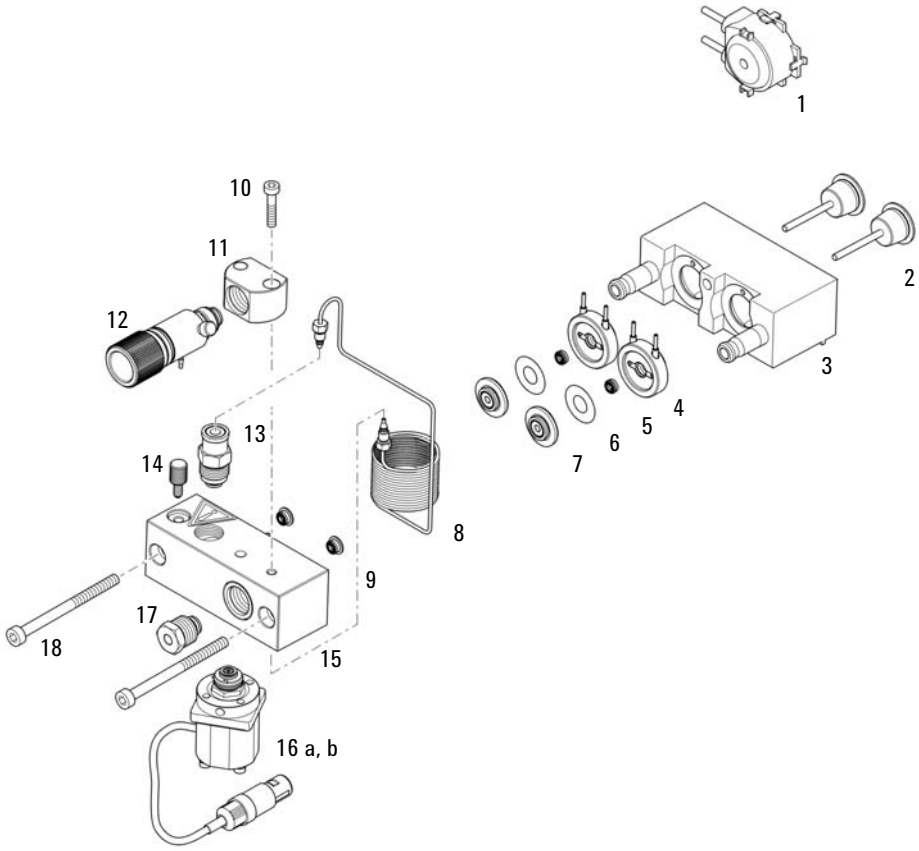

Figure 28 Pump head assembly with seal wash option

Outlet Valve

p/n	Description
G1312-60067	Outlet valve 1220/1260

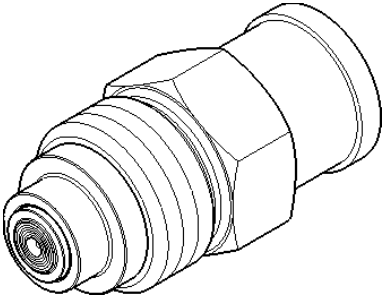

Figure 29 Outlet Valve

Purge Valve Assembly

Item	p/n	Description
1	G1312-60061	Purge valve 1260
2	01018-22707	PTFE frits (pack of 5)
3	5067-4728	Seal cap

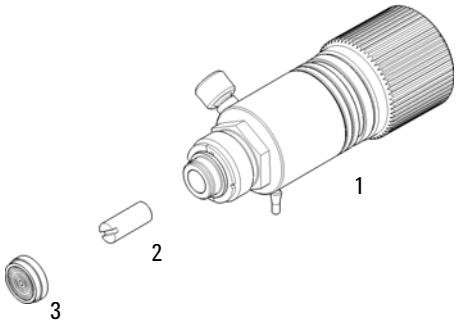

Figure 30 Purge Valve Assembly

Active Inlet Valve Assembly

Item	p/n	Description
1	G1312-60025	Active inlet valve body, without cartridge
2	G1312-60020	Cartridge for active inlet valve 600 bar

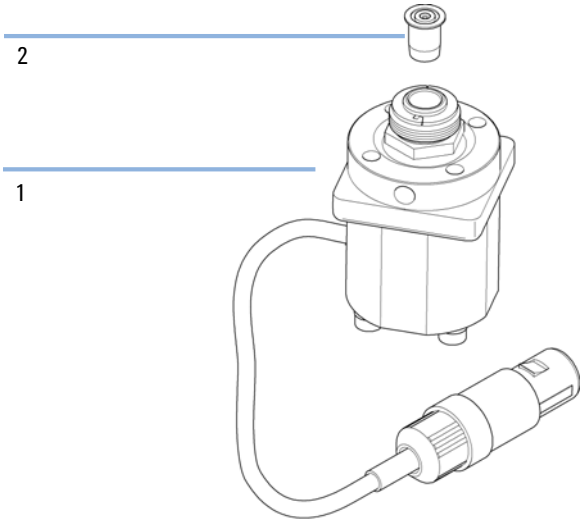

Figure 31 Active Inlet Valve Assembly

HPLC Starter Kit G4201-68707

HPLC Starter Kit incl. 0.17 mm i.d. cap (G4201-68707)

p/n	Description
9301-1420 (3x)	Solvent bottle, transparent
9301-1450	Solvent bottle, amber
01018-22707	PTFE frits (pack of 5)
5182-0716	Screw Cap Vial, 2 mL, amber glass, write-on spot, 100/pk
5182-0717	Blue screw caps 100/pk
5063-6507 (2x)	Chip, Column I.D. Assy
5041-2168 (2x)	Solvent inlet filter, 20 µm pore size
5065-9939	Capillary/Fitting Starter Kit 0.17 mm id

HPLC Starter Kit G4202-68707

HPLC Starter Kit incl. 0.12 mm i.d. cap (G4202-68707)

p/n	Description
9301-1420 (3x)	Solvent bottle, transparent
9301-1450	Solvent bottle, amber
01018-22707	PTFE frits (pack of 5)
5182-0716	Screw Cap Vial, 2 mL, amber glass, write-on spot, 100/pk
5182-0717	Blue screw caps 100/pk
5063-6507 (2x)	Chip, Column I.D. Assy
5041-2168 (2x)	Solvent inlet filter, 20 µm pore size
G1316-80003	Heater long-down (0.12 mm i.d., 1.6 µL internal volume)
5065-9937	Capillary/Fitting Starter Kit 0.12 mm id

HPLC System Tool Kit

The HPLC System Tool Kit (G4203-68708) contains some accessories and tools needed for installation and repair of the module.

p/n	Description
0100-1681	Adapter syringe/seal wash tube
0100-1710	Mounting Tool for Tubing Connections
01018-23702	Insert tool
5023-0240	Hex driver, ¼", slitted
8710-0060	Hex-key wrench, 9/64 inch
8710-0510 (2x)	Wrench open 1/4 — 5/16 inch
8710-0641	Hex key set 1 – 5 mm
8710-0899	Pozidriv screwdriver
8710-1534	Wrench, 4 mm both ends, open end
8710-1924	Wrench open 14 mm
8710-2392	Hex key 4 mm15 cm long T-handle
8710-2393	Hex key 1.5 mm, straight handle 10 cm
8710-2394	Hex key 9/64 inch 15 cm long T-handle
8710-2409	Wrench open end, 5/16 – 3/8 inch
8710-2411	Hex key 3 mm12 cm long
8710-2412	Hex key 2.5 mm, 15 cm long, straight handle
8710-2438	Hex key 2.0 mm
8710-2509	Screwdriver Torx TX8
8710-2594	Double open end wrench 4 mm
9301-0411	Syringe, Plastic
9301-1337	Adapter syringe/solvent tube with fitting

Bottle Head Assembly

Item	p/n	Description
1	9301-1450	Solvent bottle, amber
2	9301-1420	Solvent bottle, transparent
3	G1311-60003	Bottle-head assembly
4	5063-6598	Ferrules with lock ring (10/Pk)
5	5063-6599	Tube screw (10/Pk)
6	5062-2483	Solvent tubing, 5 m
7	5062-8517	Inlet filter adapter (4/Pk)
8	5041-2168	Solvent inlet filter, 20 µm pore size

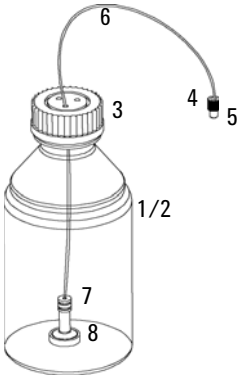

Figure 32 Bottle-Head Assembly Parts

Solvent Cabinet

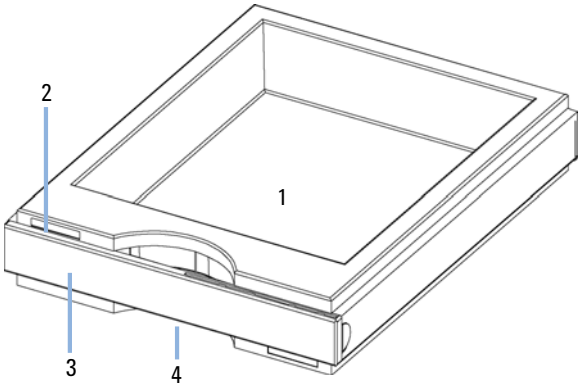

Figure 33 Solvent Cabinet Parts (1)

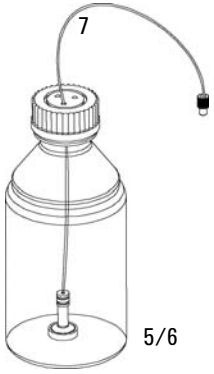

Figure 34 Solvent Cabinet Parts (2)

Item	p/n	Description
1	5065-9981	Solvent cabinet 1200 Infinity, including all plastic parts
2	5043-0207	Name plate 1260
3	5065-9954	Front panel, solvent cabinet
4	5042-8907	Leak panel
5	9301-1450	Solvent bottle, amber
6	9301-1420	Solvent bottle, transparent
7	G1311-60003	Bottle-head assembly

12
Identifying Cables

This chapter provides information on cables used with the Agilent 1200 Infinity Series modules.

Overview

NOTE Never use cables other than the ones supplied by Agilent Technologies to ensure proper functionality and compliance with safety or EMC regulations.

Analog cables

p/n	Description
35900-60750	Agilent module to 3394/6 integrators
35900-60750	Agilent 35900A A/D converter
01046-60105	Analog cable (BNC to general purpose, spade lugs)

Remote cables

p/n	Description
03394-60600	Agilent module to 3396A Series I integrators
	3396 Series II / 3395A integrator, see details in section "Remote Cables" on page 206
03396-61010	Agilent module to 3396 Series III / 3395B integrators
5061-3378	Remote Cable
01046-60201	Agilent module to general purpose

BCD cables

p/n	Description
03396-60560	Agilent module to 3396 integrators
G1351-81600	Agilent module to general purpose

CAN cables

p/n	Description
5181-1516	CAN cable, Agilent module to module, 0.5 m
5181-1519	CAN cable, Agilent module to module, 1 m

LAN cables

p/n	Description
5023-0203	Cross-over network cable, shielded, 3 m (for point to point connection)
5023-0202	Twisted pair network cable, shielded, 7 m (for point to point connection)

External Contact Cable

p/n	Description
G1103-61611	External contact cable - Agilent module interface board to general purposes

RS-232 cables

p/n	Description
G1530-60600	RS-232 cable, 2 m
RS232-61601	RS-232 cable, 2.5 m Instrument to PC, 9-to-9 pin (female). This cable has special pin-out, and is not compatible with connecting printers and plotters. It's also called "Null Modem Cable" with full handshaking where the wiring is made between pins 1-1, 2-3, 3-2, 4-6, 5-5, 6-4, 7-8, 8-7, 9-9.
5181-1561	RS-232 cable, 8 m

Analog cables

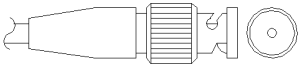

One end of these cables provides a BNC connector to be connected to Agilent modules. The other end depends on the instrument to which connection is being made.

Agilent Module to 3394/6 Integrators

p/n 35900-60750	Pin 3394/6	Pin Agilent module	Signal Name
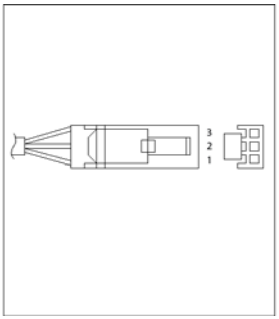	1		Not connected
	2	Shield	Analog -
	3	Center	Analog +

Agilent Module to BNC Connector

p/n 8120-1840	Pin BNC	Pin Agilent module	Signal Name
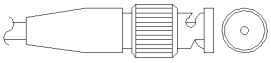	Shield	Shield	Analog -
	Center	Center	Analog +

Agilent Module to General Purpose

p/n 01046-60105	Pin	Pin Agilent module	Signal Name
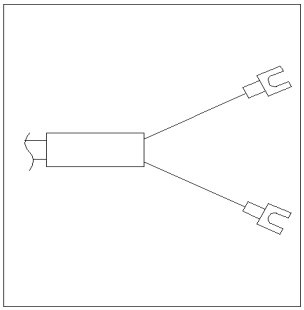	1		Not connected
	2	Black	Analog -
	3	Red	Analog +

Remote Cables

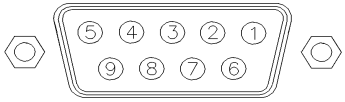

One end of these cables provides a Agilent Technologies APG (Analytical Products Group) remote connector to be connected to Agilent modules. The other end depends on the instrument to be connected to.

Agilent Module to 3396A Integrators

p/n 03394-60600	Pin 3396A	Pin Agilent module	Signal Name	Active (TTL)
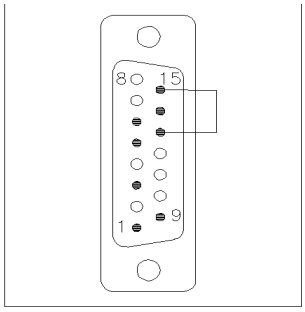	9	1 - White	Digital ground	
	NC	2 - Brown	Prepare run	Low
	3	3 - Gray	Start	Low
	NC	4 - Blue	Shut down	Low
	NC	5 - Pink	Not connected	
	NC	6 - Yellow	Power on	High
	5,14	7 - Red	Ready	High
	1	8 - Green	Stop	Low
	NC	9 - Black	Start request	Low
	13, 15		Not connected	

Agilent Module to 3396 Series II / 3395A Integrators

Use the cable Agilent module to 3396A Series I integrators (03394-60600) and cut pin #5 on the integrator side. Otherwise the integrator prints START; not ready.

Agilent Module to 3396 Series III / 3395B Integrators

p/n 03396-61010	Pin 33XX	Pin Agilent module	Signal Name	Active (TTL)
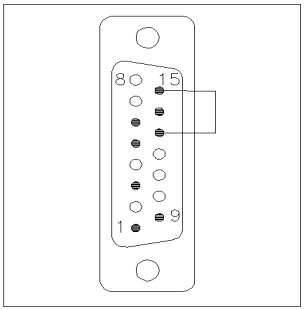	9	1 - White	Digital ground	
	NC	2 - Brown	Prepare run	Low
	3	3 - Gray	Start	Low
	NC	4 - Blue	Shut down	Low
	NC	5 - Pink	Not connected	
	NC	6 - Yellow	Power on	High
	14	7 - Red	Ready	High
	4	8 - Green	Stop	Low
	NC	9 - Black	Start request	Low
	13, 15		Not connected	

Agilent Module to Agilent 35900 A/D Converters

p/n 5061-3378	Pin 35900 A/D	Pin Agilent module	Signal Name	Active (TTL)
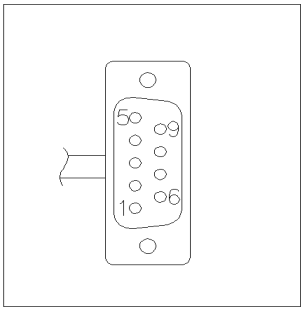	1 - White	1 - White	Digital ground	
	2 - Brown	2 - Brown	Prepare run	Low
	3 - Gray	3 - Gray	Start	Low
	4 - Blue	4 - Blue	Shut down	Low
	5 - Pink	5 - Pink	Not connected	
	6 - Yellow	6 - Yellow	Power on	High
	7 - Red	7 - Red	Ready	High
	8 - Green	8 - Green	Stop	Low
	9 - Black	9 - Black	Start request	Low

Agilent Module to General Purpose

p/n 01046-60201	Wire Color	Pin Agilent module	Signal Name	Active (TTL)
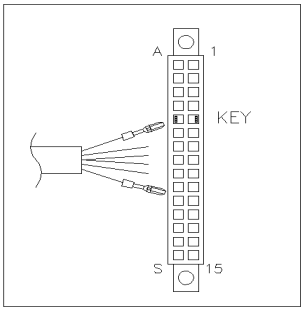	White	1	Digital ground	
	Brown	2	Prepare run	Low
	Gray	3	Start	Low
	Blue	4	Shut down	Low
	Pink	5	Not connected	
	Yellow	6	Power on	High
	Red	7	Ready	High
	Green	8	Stop	Low
	Black	9	Start request	Low

BCD Cables

One end of these cables provides a 15-pin BCD connector to be connected to the Agilent modules. The other end depends on the instrument to be connected to

Agilent Module to General Purpose

p/n G1351-81600	Wire Color	Pin Agilent module	Signal Name	BCD Digit
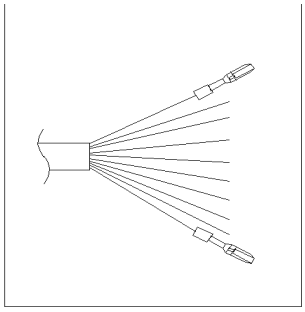	Green	1	BCD 5	20
	Violet	2	BCD 7	80
	Blue	3	BCD 6	40
	Yellow	4	BCD 4	10
	Black	5	BCD 0	1
	Orange	6	BCD 3	8
	Red	7	BCD 2	4
	Brown	8	BCD 1	2
	Gray	9	Digital ground	Gray
	Gray/pink	10	BCD 11	800
	Red/blue	11	BCD 10	400
	White/green	12	BCD 9	200
	Brown/green	13	BCD 8	100
	not connected	14		
	not connected	15	+ 5 V	Low

Agilent Module to 3396 Integrators

p/n 03396-60560	Pin 3396	Pin Agilent module	Signal Name	BCD Digit
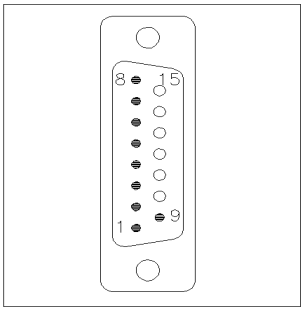	1	1	BCD 5	20
	2	2	BCD 7	80
	3	3	BCD 6	40
	4	4	BCD 4	10
	5	5	BCD0	1
	6	6	BCD 3	8
	7	7	BCD 2	4
	8	8	BCD 1	2
	9	9	Digital ground	
	NC	15	+ 5 V	Low

CAN/LAN Cables

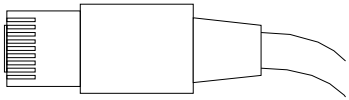

Both ends of this cable provide a modular plug to be connected to Agilent modules CAN or LAN connectors.

CAN Cables

p/n	Description
5181-1516	CAN cable, Agilent module to module, 0.5 m
5181-1519	CAN cable, Agilent module to module, 1 m

LAN Cables

p/n	Description
5023-0203	Cross-over network cable, shielded, 3 m (for point to point connection)
5023-0202	Twisted pair network cable, shielded, 7 m (for point to point connection)

External Contact Cables

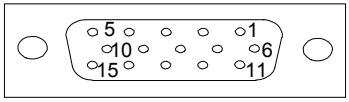

One end of this cable provides a 15-pin plug to be connected to Agilent modules interface board. The other end is for general purpose.

Agilent Module Interface Board to general purposes

p/n G1103-61611	Color	Pin Agilent module	Signal Name
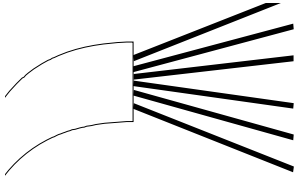	White	1	EXT 1
	Brown	2	EXT 1
	Green	3	EXT 2
	Yellow	4	EXT 2
	Grey	5	EXT 3
	Pink	6	EXT 3
	Blue	7	EXT 4
	Red	8	EXT 4
	Black	9	Not connected
	Violet	10	Not connected
	Grey/pink	11	Not connected
	Red/blue	12	Not connected
	White/green	13	Not connected
	Brown/green	14	Not connected
	White/yellow	15	Not connected

RS-232 Cable Kit

p/n	Description
G1530-60600	RS-232 cable, 2 m
RS232-61601	RS-232 cable, 2.5 m Instrument to PC, 9-to-9 pin (female). This cable has special pin-out, and is not compatible with connecting printers and plotters. It's also called "Null Modem Cable" with full handshaking where the wiring is made between pins 1-1, 2-3, 3-2, 4-6, 5-5, 6-4, 7-8, 8-7, 9-9.
5181-1561	RS-232 cable, 8 m

Agilent 1200 Module to Printer

p/n	Description
5181-1529	Cable Printer Serial & Parallel, is a SUB-D 9 pin female vs. Centronics connector on the other end (NOT FOR FW UPDATE). For use with G1323 Control Module.